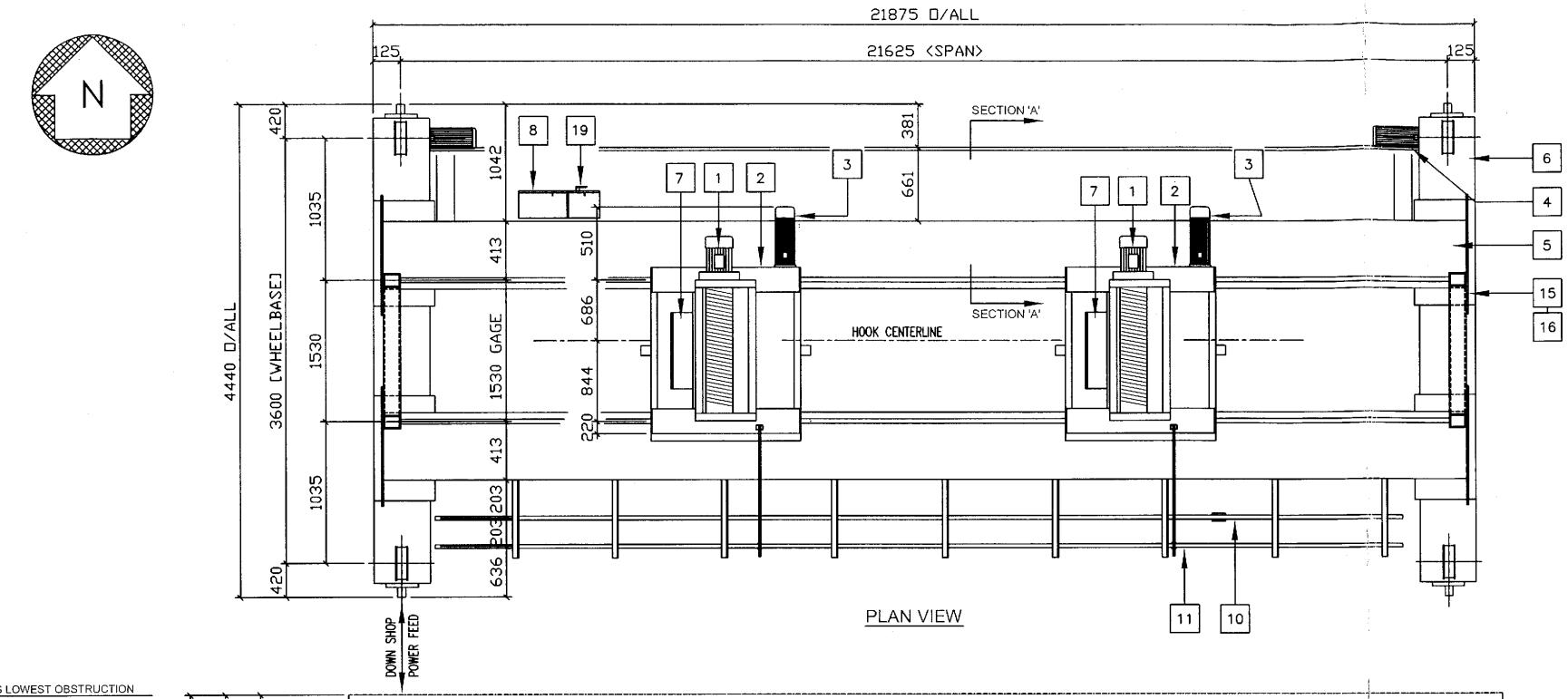

PLAN VIEW

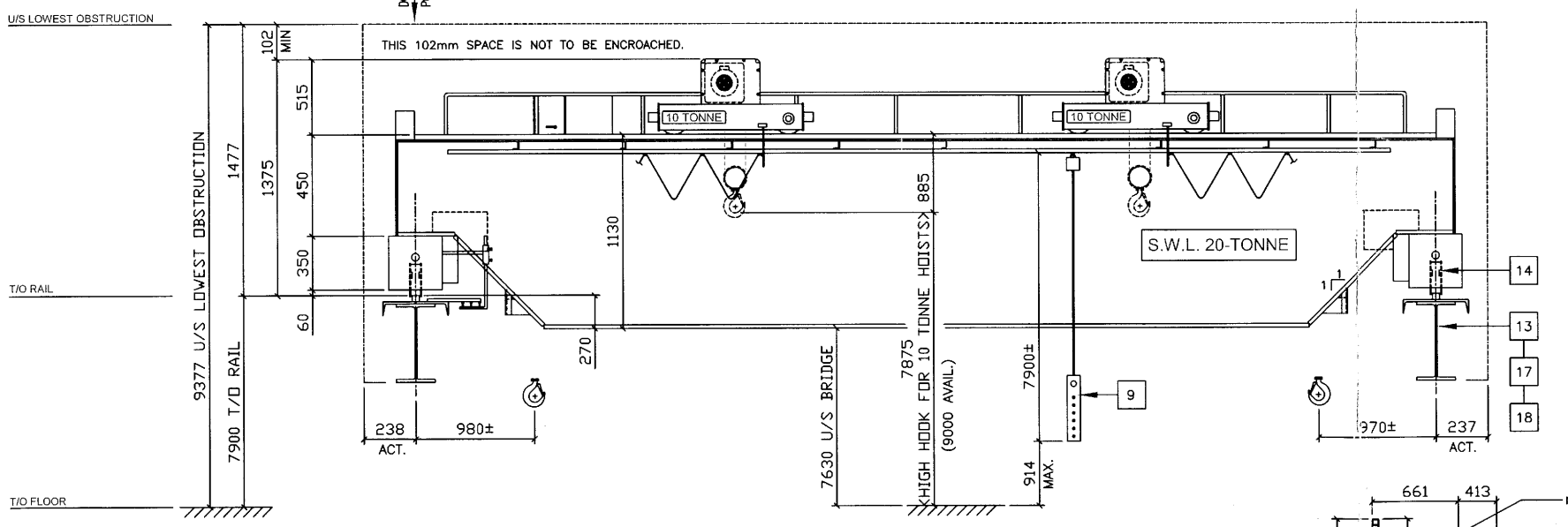

ELEVATION VIEW

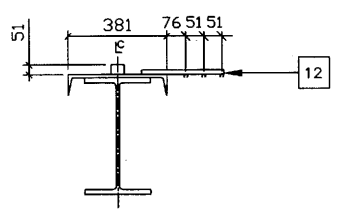

RUNWAY BEAM

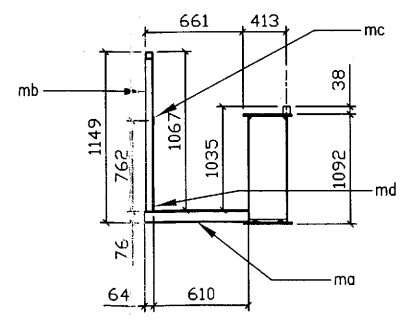

SECTION A-A

MATERIAL AND PARTS LIST FOR 1-CRANE [1-CRANE REQUIRED]

ITEM	QTY	COMPONENT	DESCRIPTION
1	2	HOIST	GHE 10B 2108 H1 c/w ROPE GUIDE, OVERWEIGHT PROTECTION, AND UPPER & LOWER LIMIT SWITCHES
2	2	TROLLEY	GH BIRAIL CRAB WITH ITEM No. 1
3	2	TROLLEY TRAVEL MACHINERY	GH. STD.
4	2	BRIDGE TRAVEL MACHINERY	GH STD.
5	2	BRIDGE GIRDER (WELDED)	BOX GIRDER: 1092mmx457mm c/w 38mm SQ. BAR
6	2	END TRUCKS	GH 400 SERIES c/w RUBBER BUMPERS & 400mmø WHEELS
7	2	ELEC. PANEL, HOIST-TROLLEY	GH STD. ON TROLLEY
8	1	ELEC. PANEL, BRIDGE	W.F. STD. ON BRIDGE
9	1	PUSH BUTTON PENDANT	SIEMENS DST 7 c/w EMERGENCY STOP
10	1	POWER FEED, PENDANT	B.I.W. F.C. FESTOON c/w DUCT-O-WIRE TROLLEY & CABLE SADDLES & W.F. PIPE TRACK
11	1	POWER FEED, HOIST-TROLLEY	B.I.W. F.C. FESTOON c/w DUCT-O-WIRE TROLLEY & CABLE SADDLES & W.F. PIPE TRACK
12	3	POWER FEED, BRIDGE	EXISTING DUCT-O-BAR (250AMP) @ APPROX.110M - CRANE c/w P200 VT5 DOUBLE SHOE COLLECTOR
13	2	RUNWAYS	EXISTING W610x101 c/w C380x50 CAP
14	2	RUNWAY RAIL	51mm SQ. BAR
15	1	FINISH: PRIMER, CRANE	TOWER T101 QD - GREY
16	1	FINISH: PAINT, CRANE	TOWER T210 - YELLOW
17	1	FINISH: PRIMER, RUNWAYS	N/A
18	0	FINISH: PAINT, RUNWAYS	N/A
19	1	DISCONNECT SWITCH	W.F. STD. ON WALKWAY
20	1	WALKWAY	W.F. STD. c/w KICK PLATES & NON-SLIP CHECKERED PLATE
21			
22			
23			
24			
26			
27			
28			
29			
30			

GENERAL SPECIFICATIONS

RATED CAPACITY (BRIDGE)	20 TONNE
RATED CAPACITY PER HOIST	10 TONNE
BRIDGE SPAN	21625mm
LIFT AVAILABLE ON HOIST	9000mm
HOISTING SPEED(S)	8.0/1.3 m/min
TROLLEY SPEED(S)	24.3/6.1 m/min
BRIDGE SPEED(S)	39.6/9.9 m/min
HOIST-TROLLEY WEIGHT	1,127kg. /ea.
BRIDGE WEIGHT (APROX.)	18,900kg.
CRANE CLASSIFICATION	CMAA CLASS C
ELECTRICAL CLASSIFICATION	EEMAC 3
MAIN POWER SUPPLY (V/PH/Hz)	460/3/60
CRANE SURFACE PREPARATION	SSPC SP3
RUNWAY SURFACE PREPARATION	N/A
SHOP TEST / Q.C.	WF STANDARD ☒ OTHER ☐
SPECIAL ELECTRICAL REQUIREMENTS	N/A
TAG OR SPECIAL MARKING	C2657E

SHOP NOTES: (CANADA)

1. N.A. = NOT APPLICABLE
2. N.I.C. = NOT IN CONTRACT
3. PLEASE CHECK FOR AND NOTE ANY NON-CONFORMING DIMENSIONS, ELEVATIONS AND ELECTRICAL SPECIFICATIONS.
4. STEEL IS TO CONFORM TO CSA 350W FOR WIDE FLANGE & ANGLE SHAPES AND MINIMUM CSA 300W FOR ALL OTHER SHAPES AND PLATE WORK.
5. BOLTS ARE TO CONFORM TO A.S.T.M. A325, 3/4"Ø UNLESS NOTED.
6. WELDS TO C.S.A. W59 LATEST EDITION.
7. ALL CONSUMABLES FOR STRUCTURAL STEEL TO BE CONTROLLED HYDROGEN ELECTRODES E70XX OR E480XX UNLESS NOTED.
8. ALL WELDS TO BE 1/4" CONTINUOUS FILLET, FLARE OR BEVEL @ ALL STRUCTURAL JOINTS UNLESS NOTED.

ENTERED MAR - 6 2001

PROFESSIONAL ENGINEER ALBERTA

MK	QTY	DESCRIPTION	LENGTH	WEIGHT
ma	13	C75 x 6	674	
mb	13	L 51 x 51 x 6.4	1016	
mc	1	FB. 6 x 51	SHOP SET	
md	1	NON-SLIP CHECKER PLATE	SHOP SET	

REV.	DATE	DESCRIPTION	BY	CHK.
1	2001/03/06	REVISED TO SUIT TROLLEY GAGE	R.S.	B.C.
0	2001/01/22	ISSUED FOR FABRICATION	R.S.	B.C.

INFORMATION INCLUDED IN THIS DRAWING IS PROPRIETARY AND IS NOT TO BE REPRODUCED, DISTRIBUTED, OR DISCLOSED EXCEPT AS SPECIFICALLY AUTHORIZED IN WRITING BY WF WELDING & OVERHEAD CRANES LTD.

W.F. WELDING & OVERHEAD CRANES LTD.
705 - 23 AVENUE
NISKU, ALBERTA, T9E 7Y5
Telephone No. (780) 955 - 7671
Fax No. (780) 955 - 7690

CUSTOMER: W.F. WELDING & OVERHEAD CRANES LTD.

TITLE: GENERAL ASSEMBLY
20 TONNE T.R.D.G. OVERHEAD CRANES

DRAFTED BY:	R.S.	DATE:	2001/03/06	DESTINATION:	NEW FABRICATION FACILITY
CHECKED BY:	B.C.	PPDD:	---	JOB No.:	C2657
SCALE:	N.T.S.	DRAWING No.:	C2657E-01	REV.:	1

COMP. REF. - WF - TRDG-003